MOKA - KEEPER

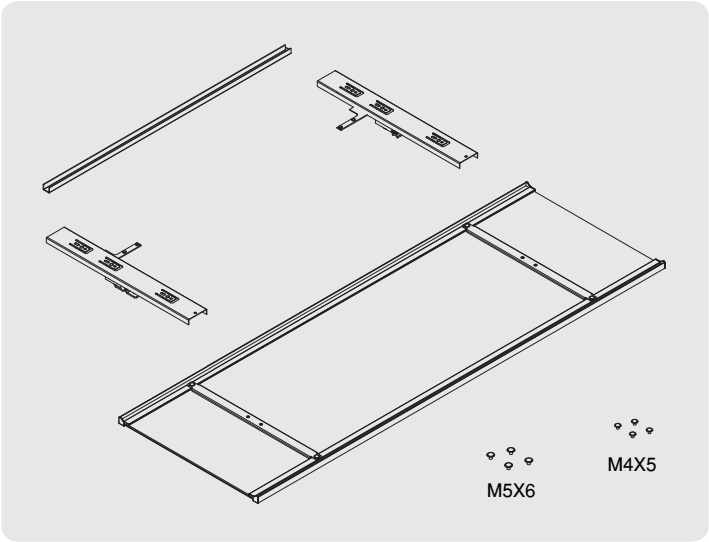

1

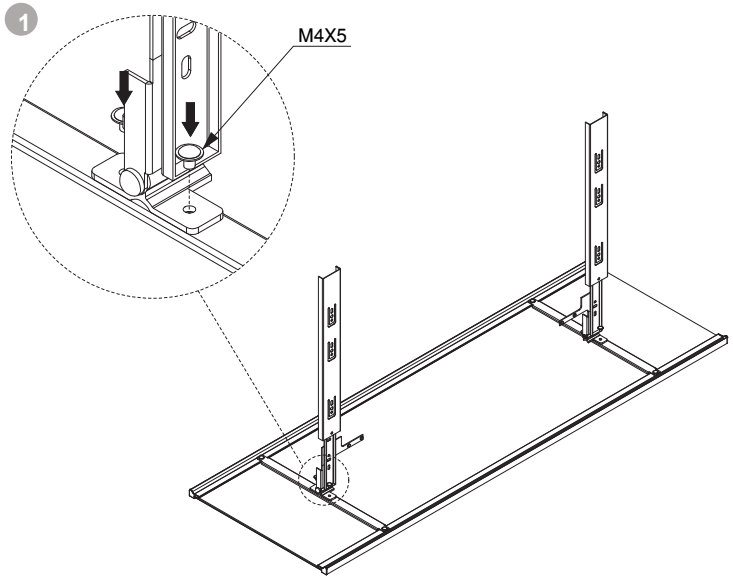

2

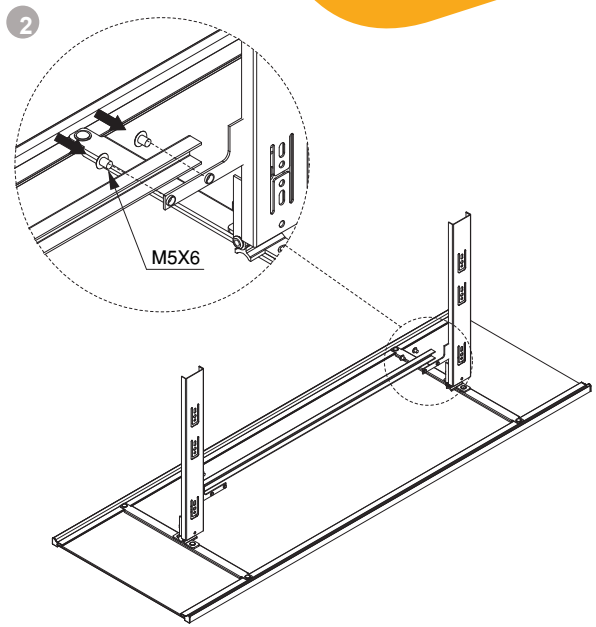

3

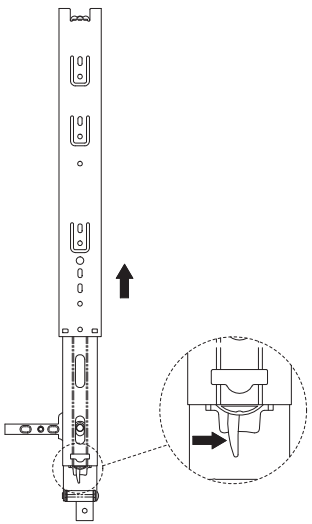

4

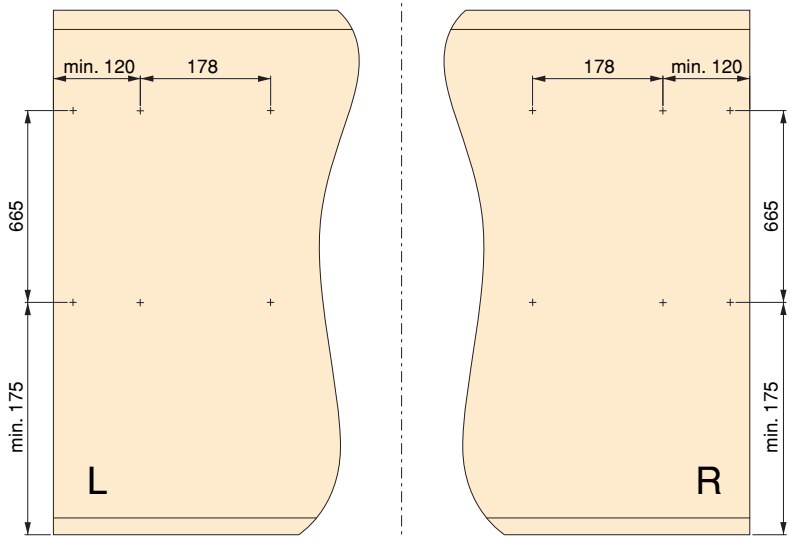
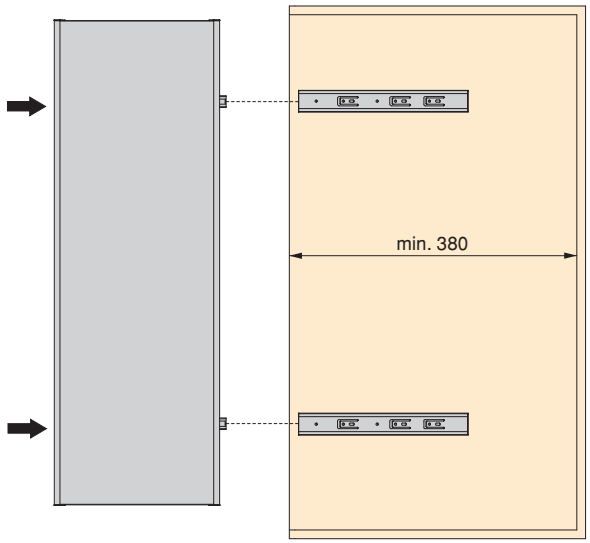
5