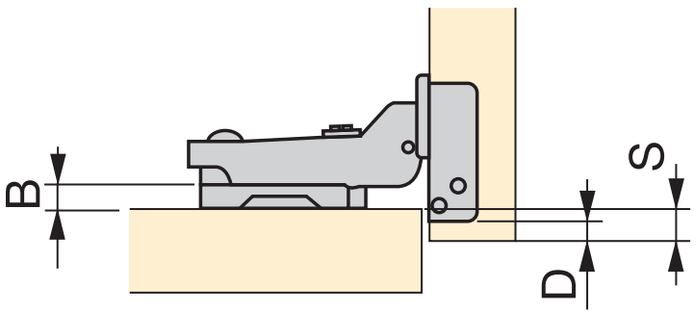

B = 5 + D - S